SHIP PRODUCTION COMMITTEE
FACILITIES AND ENVIRONMENTAL EFFECTS
SURFACE PREPARATION AND COATINGS
DESIGN/PRODUCTION INTEGRATION
HUMAN RESOURCE INNOVATION
MARINE INDUSTRY STANDARDS
WELDING
INDUSTRIAL ENGINEERING
EDUCATION AND TRAINING

September 1981
NSRP 0008

THE NATIONAL SHIPBUILDING RESEARCH PROGRAM

Proceedings of the REAPS Technical Symposium

Paper No. 3: AUTODRAW: AUTOKON'S Interactive Graphics System for Viewing and Manipulating Structural Model Data

U.S. DEPARTMENT OF THE NAVY
CARDEROCK DIVISION,
NAVAL SURFACE WARFARE CENTER

Report Documentation Page

Form Approved
OMB No. 0704-0188

Public reporting burden for the collection of information is estimated to average 1 hour per response, including the time for reviewing instructions, searching existing data sources, gathering and maintaining the data needed, and completing and reviewing the collection of information. Send comments regarding this burden estimate or any other aspect of this collection of information, including suggestions for reducing this burden, to Washington Headquarters Services, Directorate for Information Operations and Reports, 1215 Jefferson Davis Highway, Suite 1204, Arlington VA 22202-4302. Respondents should be aware that notwithstanding any other provision of law, no person shall be subject to a penalty for failing to comply with a collection of information if it does not display a currently valid OMB control number.

1. REPORT DATE	2. REPORT TYPE	3. DATES COVERED
SEP 1981	**N/A**	**-**

4. TITLE AND SUBTITLE	5a. CONTRACT NUMBER
The National Shipbuilding Research Program Proceedings of the IREAPS Technical Symposium Paper No. 3: AUTODRAW AUTOKON'S Interactive Graphics System for Viewing and Manipulating Structural Model Data	5b. GRANT NUMBER
	5c. PROGRAM ELEMENT NUMBER
6. AUTHOR(S)	5d. PROJECT NUMBER
	5e. TASK NUMBER
	5f. WORK UNIT NUMBER
7. PERFORMING ORGANIZATION NAME(S) AND ADDRESS(ES) **Naval Surface Warfare Center CD Code 2230 - Design Integration Tools Building 192 Room 128 9500 MacArthur Blvd Bethesda, MD 20817-5700**	8. PERFORMING ORGANIZATION REPORT NUMBER
9. SPONSORING/MONITORING AGENCY NAME(S) AND ADDRESS(ES)	10. SPONSOR/MONITOR'S ACRONYM(S)
	11. SPONSOR/MONITOR'S REPORT NUMBER(S)

12. DISTRIBUTION/AVAILABILITY STATEMENT
Approved for public release, distribution unlimited

13. SUPPLEMENTARY NOTES

14. ABSTRACT

15. SUBJECT TERMS

16. SECURITY CLASSIFICATION OF:			17. LIMITATION OF ABSTRACT	18. NUMBER OF PAGES	19a. NAME OF RESPONSIBLE PERSON
a. REPORT	b. ABSTRACT	c. THIS PAGE			
unclassified	**unclassified**	**unclassified**	**SAR**	**21**	

DISCLAIMER

These reports were prepared as an account of government-sponsored work. Neither the United States, nor the United States Navy, nor any person acting on behalf of the United States Navy (A) makes any warranty or representation, expressed or implied, with respect to the accuracy, completeness or usefulness of the information contained in this report/ manual, or that the use of any information, apparatus, method, or process disclosed in this report may not infringe privately owned rights; or (B) assumes any liabilities with respect to the use of or for damages resulting from the use of any information, apparatus, method, or process disclosed in the report. As used in the above, “Persons acting on behalf of the United States Navy” includes any employee, contractor, or subcontractor to the contractor of the United States Navy to the extent that such employee, contractor, or subcontractor to the contractor prepares, handles, or distributes, or provides access to any information pursuant to his employment or contract or subcontract to the contractor with the United States Navy. ANY POSSIBLE IMPLIED WARRANTIES OF MERCHANTABILITY AND/OR FITNESS FOR PURPOSE ARE SPECIFICALLY DISCLAIMED.

0008

Proceedings
IREAPS Technical Symposium
September 15-17, 1981
Baltimore, Maryland

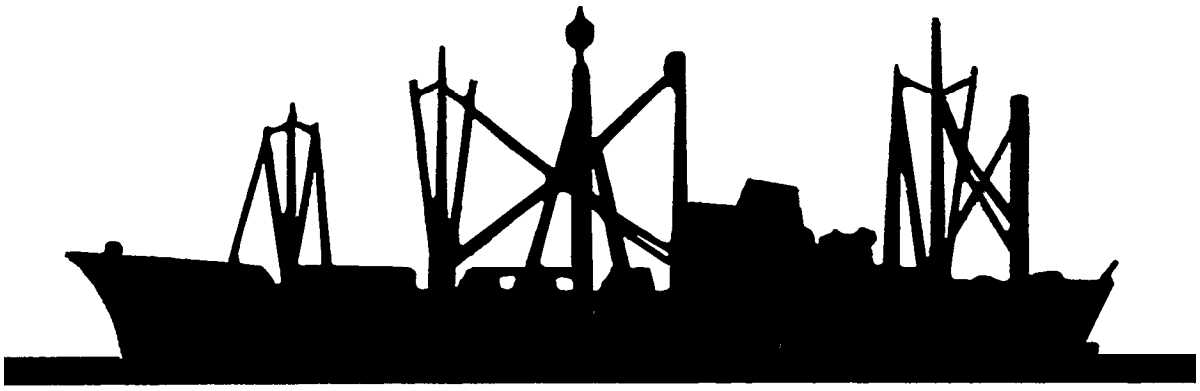

INSTITUTE FOR RESEARCH AND ENGINEERING FOR AUTOMATION AND PRODUCTIVITY IN SHIPBUILDING

IREAPS

AUTODRAW: AUTOKON'S INTERACTIVE GRAPHICS SYSTEM FOR VIEWING AND MANIPULATING STRUCTURAL MODEL DATA INTO COMPLETE DRAWING DOCUMENTATION

Frans van Cuilenborg
Shipping Research Services A/S
Oslo, Norway

1) THE PLACE OF AUTODRAW IN THE AUTOKON SYSTEM

Today AUTOKON is an integrated system for the ship-building industry. The system consists of a "BATCH" and an "NTERACTIVE" part. (See fig. 1.)

The batch oriented programs are:
BOF/LANSKI/SHELL/TRALOS/TRADET/DRA17/PARTO/ALKON.

The interactive oriented programs are:
DFREC/AUTO-NEST/AUTO-LINK/AUTO-INIT/AUTO-PART/
AUTO-DRAW/KINGDRAW/TRAPAR

AUTODRAW is a program to verify the contents of a DATA-BASE and to make complete drawings with that data. Therefore we will not compare the system with line-drawing systems.
The only "lines" drawn by AUTODRAN through input to the system are lines necessary to make the drawing complete, such as lines for dimensioning.

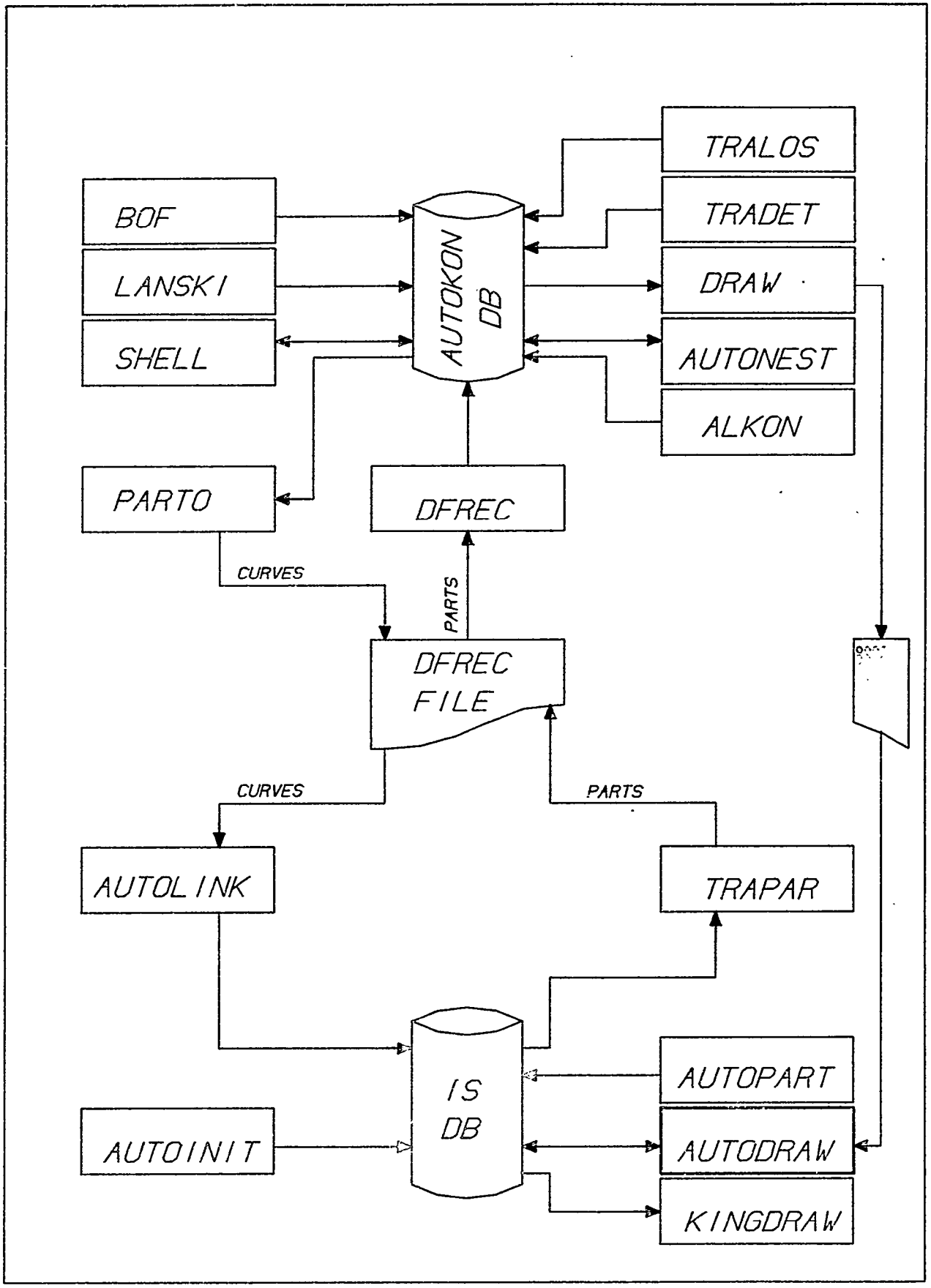
TRALOS
BOF
TRADET
AUTOKON DB
LANSKI
DRAW
SHELL
AUTONEST
ALKON
PARTO
DFREC
CURVES
PARTS
DFREC FILE
CURVES
PARTS
AUTOLINK
TRAPAR
IS DB
AUTOPART
AUTOINIT
AUTODRAW
KINGDRAW

Figure 1

Today AUTODRAW can make complete drawings such as shown in fig. 2, 3, 4, 5, 6. The information for all parts is kept in the IS database and is generated by AUTOPART.
All the parts are positioned in relation to a common XYZ axis and therefore it is easy to make composite drawings. Position one part and the other will fall automatic in place.

From the batch side of the system one can read "papertape" files into AUTODRAW as being the basic drawing. AUTODRAW can now supply this picture with text, dimensions etc.

2) WHAT CAN BE DONE WITH AUTODRAW ?

The most important functions in AUTODRAW are:

Verification

of contours, parts, assemblies and papertape files.

Generation of drawings

composition
completion by:
- text
- symbols
- dimensions
- identification

General views:
- orthogonal
- perspective
- axonometric

An additional, but minor, function is that AUTODRAW may be used in the same way as a simple graphic turn-key system,as a drafting tool to make simple pictures on the screen.

The interaction between User and System is by commands following a certain syntax.

The commands are treated by a group of programs called the Command Processor common to most of the systems in the interactive program group. Commands are entered from keyboard menue or card-image files.

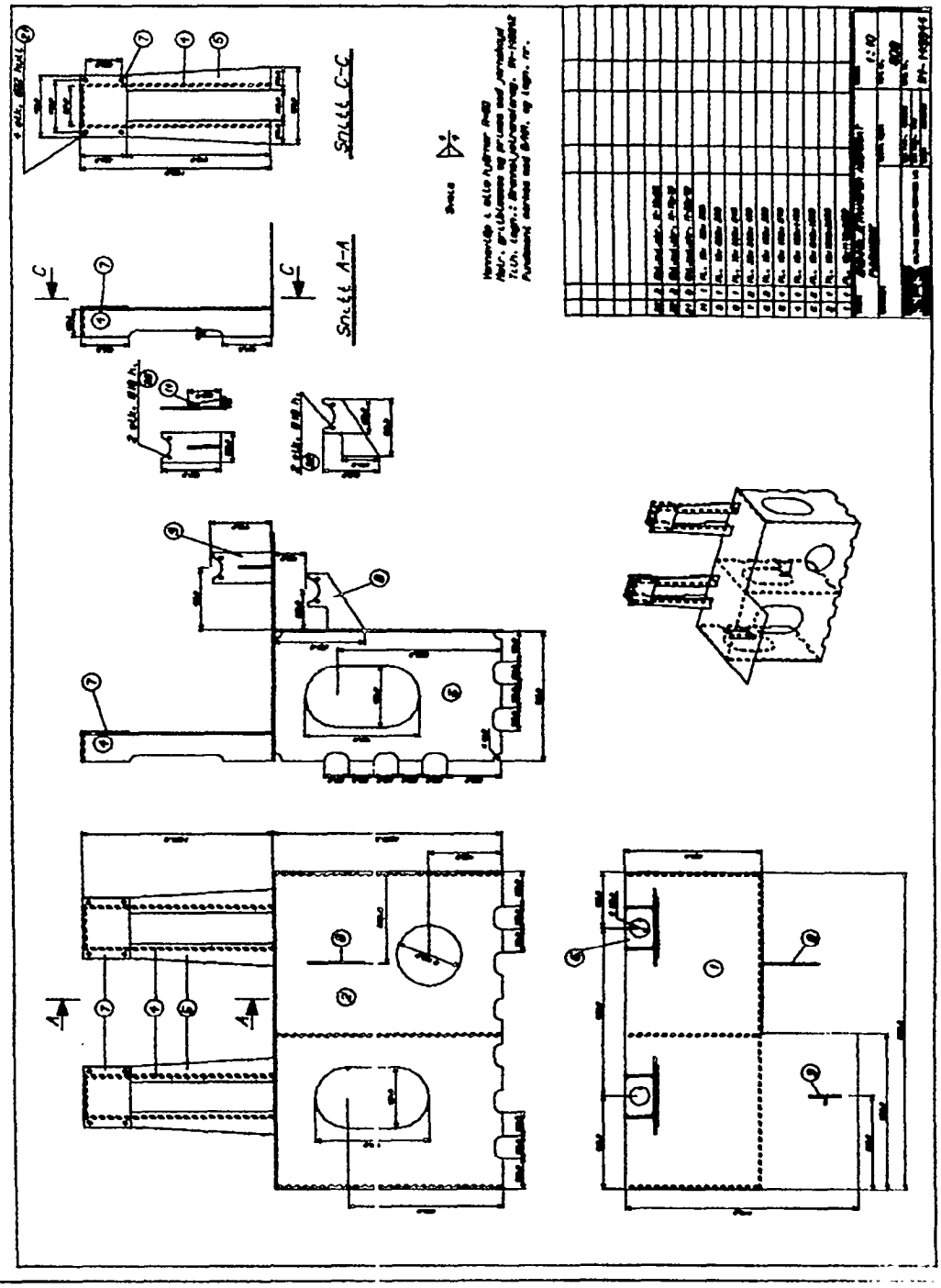

Figure 3

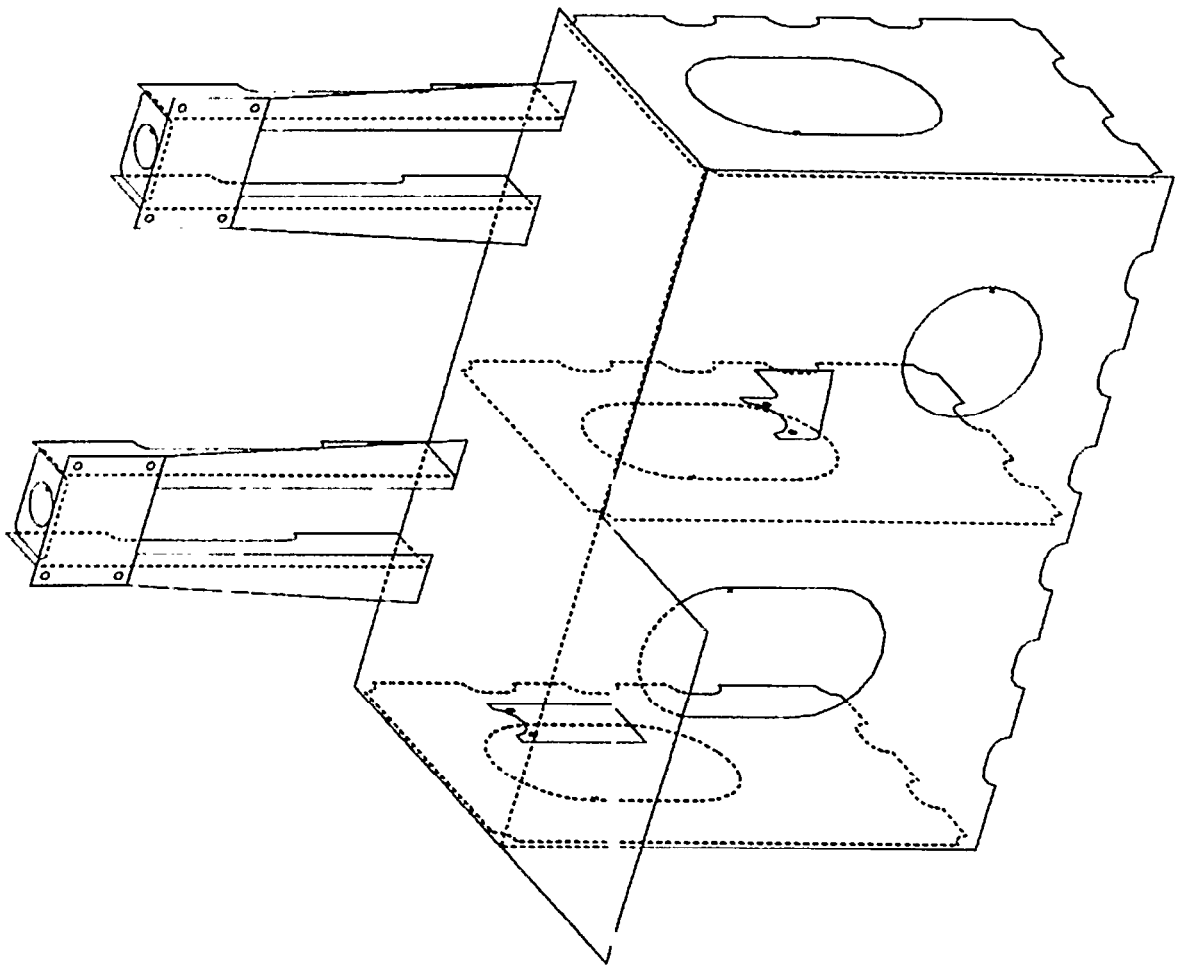

Figure 3

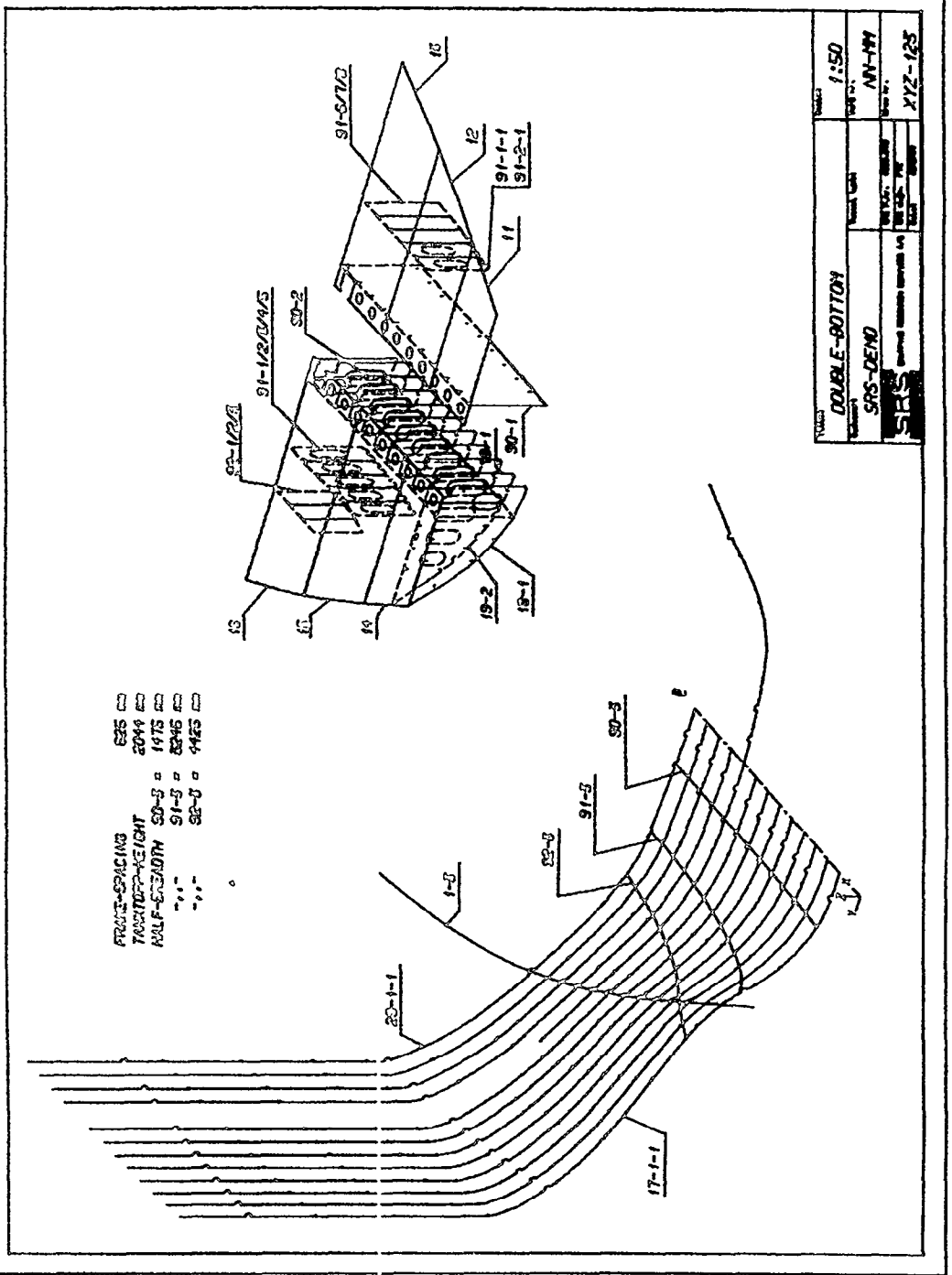
DOUBLE-BOTTOM
SRS-DEMO
1:50
NN-MM
XYZ-125
FRAME-SPACING 625
TRACKTOPP-HEIGHT 2044
HALF-BREADTH 90-3 = 1475
91-3 = 8246
92-3 = 4425
17-1-1
20-1-1
1-3
92-3
91-3
90-3
19-1
19-2
90-1
90-2
91-1/2/3/4/5
91-5/7/8
91-1-1
91-2-1
11
12
13
14
15
16

Figure 4

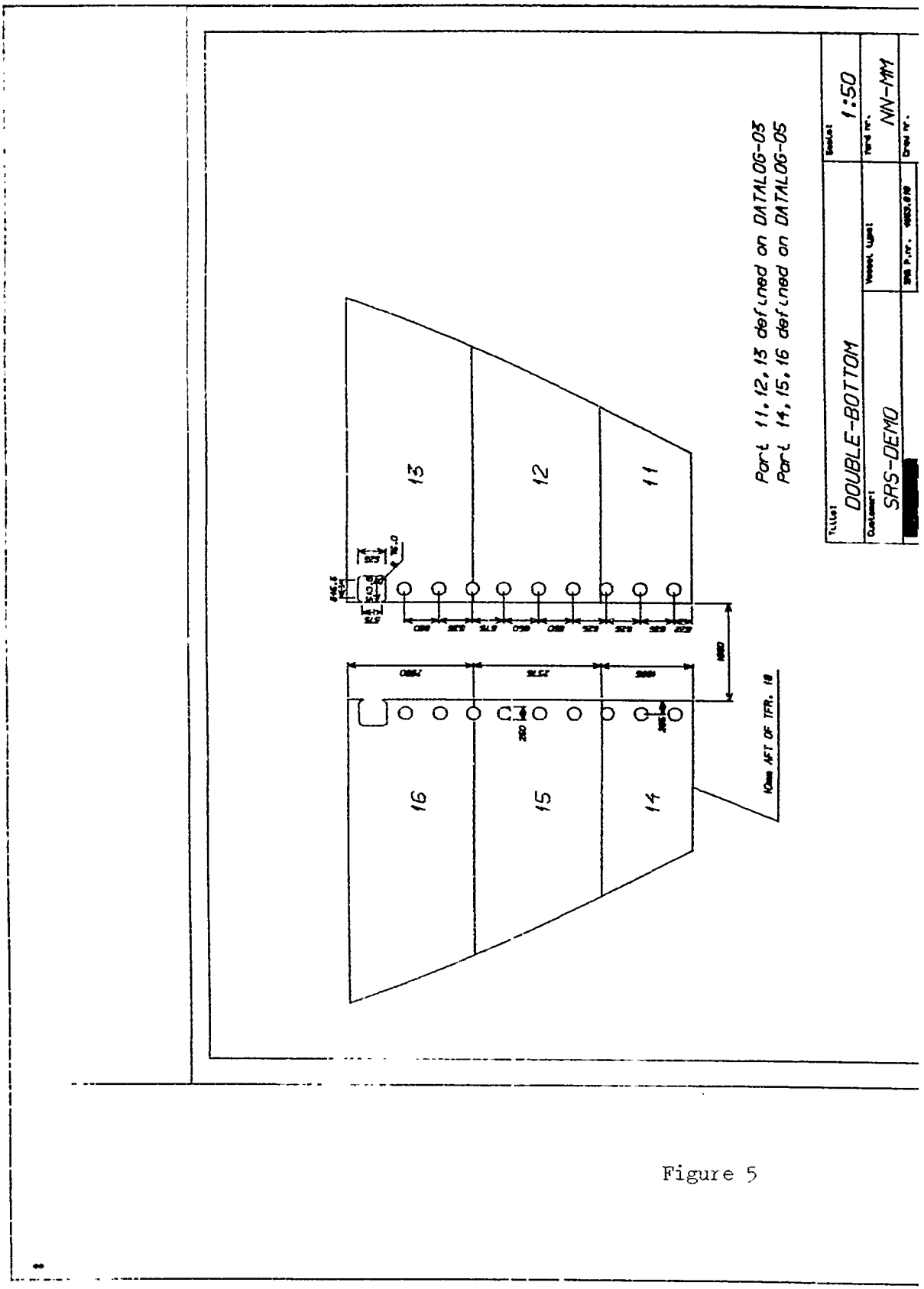
Part 11, 12, 13 defined on DATALOG-03
Part 14, 15, 16 defined on DATALOG-05
DOUBLE-BOTTOM
SRS-DEMO
1:50
NN-MM
13
12
11
16
15
14

Figure 5

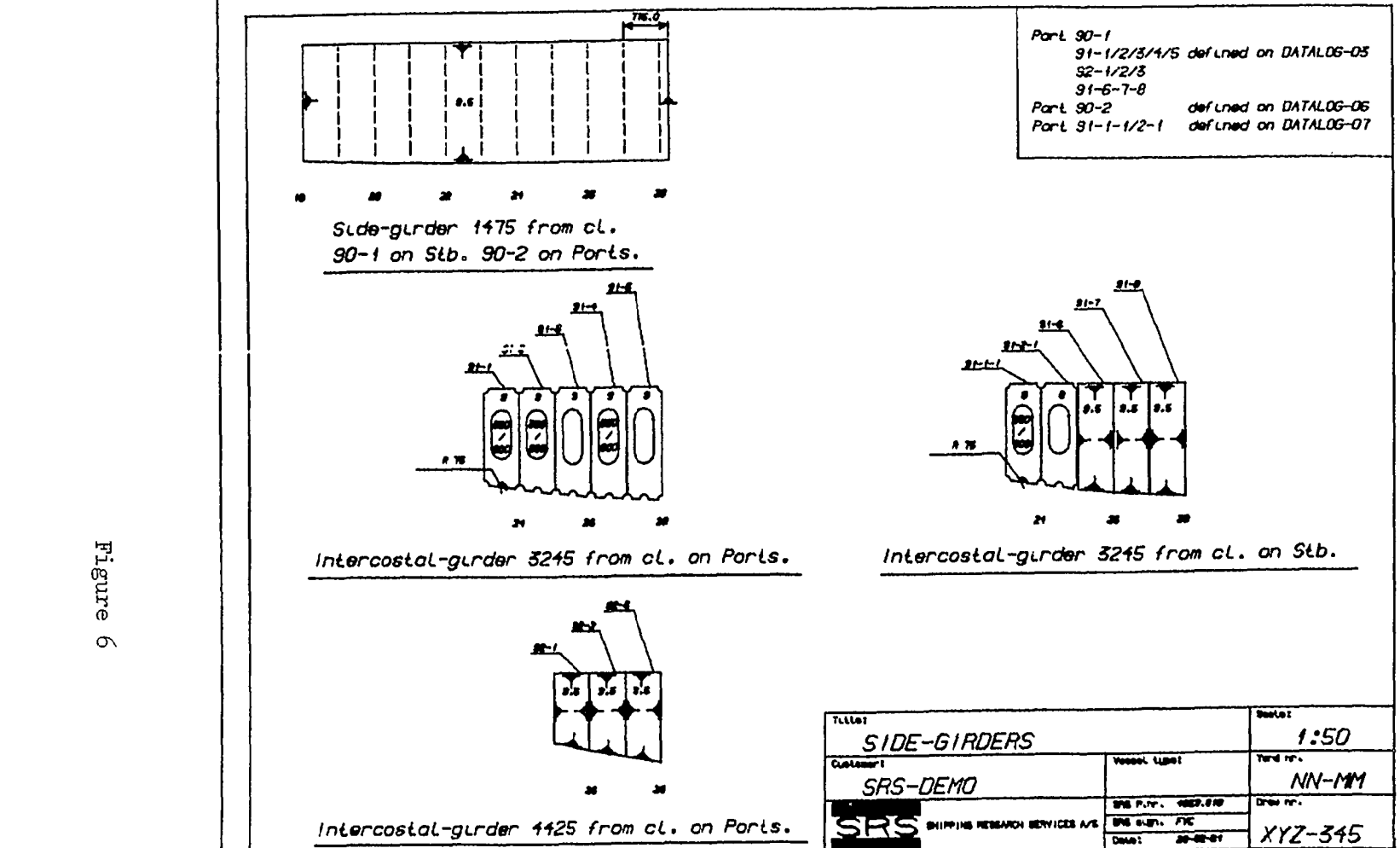
Part 90-1
91-1/2/3/4/5 defined on DATALOG-05
92-1/2/3
91-6-7-8
Part 90-2 defined on DATALOG-06
Part 91-1-1/2-1 defined on DATALOG-07
Side-girder 1475 from cl.
90-1 on Stb. 90-2 on Ports.
Intercostal-girder 3245 from cl. on Ports.
Intercostal-girder 3245 from cl. on Stb.
Intercostal-girder 4425 from cl. on Ports.
SIDE-GIRDERS
1:50
SRS-DEMO
NN-MM
XYZ-345
SRS
SHIPPING RESEARCH SERVICES A/S

Figure 6

Argumentnts may follow the command, or be given as answers to dialogue questions.
E.g. If the user remembers the sequence of arguments he could define a new picture by writing:

BEGIN-PICTURE 109,YES,A1,YES

or, he could utilize the dialogue feature:

BEGIN-PICTURE

"PICTURE-NAME:" 09
"STANDARD-A ?1:" YES
"A-FORMAT :" Al
"HORIZONTALLY?:" YES

(the questions asked by the system are between ").

The list of available commands are introduced to the system by the initializing program AUTOINIT.
The names of the commands may be changed by the user, and several different names may be connected to the same command.

The available commands fall in two main groups:

The commands specially valid for AUTODRAW

The commands common to other interactive systems.

Logically a drawingng is built as a hierarchy of three levels, called PICTURE, SEGMENT and OBJECTS (See fig. 7).

A PICTURE consists of one or several segments, a SEGMENT contains a number of OBJECTS of different types.

The OBJECT types are:

PART
CURVE
SYMBOL
TEXT
DIMEnsion

The concept of segment is introduced to separate a picture into logically distinct partitions.
When a new picture is started a segment with number zero is automatically initiated and all objects belong to segment zero if no other segment is defined.

The commands by which the user manipulates his drawing operate on a full picture, a segment or one particular object.

A typical sequence for building a segment is shown in fig. 8, 9, 10, 11.

Another general feature is the use of MACRO's. Fig. 12 shows the result of two MACRO's, one written in AUTOPART to generate all the lines for a title field and the other written in AUTODRAW to complete the title field with the text.

A MACRO may be any combination of commands which will be executed by calling up the MACRO name.

3) HOW SHOULD AUTODRAW BE USED FROM EARLY DESIGN TO SHOP DRAWING

Fig. 13 shows how the system will look like at the end of this year. We will add some new link programs so that *we* can use more information generated with TRALOS and TRADET.

The system may then be used as follows:

The first step will be to do a preliminary fairing to create the design frames necessary to make the classification drawings by means of TRALOS/TRADET. DRAW will be used to generate a papertape file which will be read by AUTODRAW. AUTODRAW is now used to make the drawings complete with text and dimensions. After the classification phase curves generated by TRALOS/TRADET are transferred to the IS database with the link programs DRAW IS and AUTOLINK.

All production parts may now be coded with AUTOPART.

AUTODRAW is now used to make complete shop-drawings for assemblies, single parts etc.

PARTS will be nested by means of AUTONEST to produce papertape for production.

PICTURE & SEGMENTS

A PICTURE MAY HAVE SEVERAL SEGMENTS.

IN THIS EXAMPLE IT IS CONVENIENT TO PARTITION THE PICTURE INTO 3 SEGMENTS

- THE TITLE AREA
- THE CURVES
- THE ASSEMBLY

TO SHIFT BETWEEN SEGMENTS WE USE THE COMMANDS:

'BEGIN-SEGMENT'

'RESUME-SEGMENT'

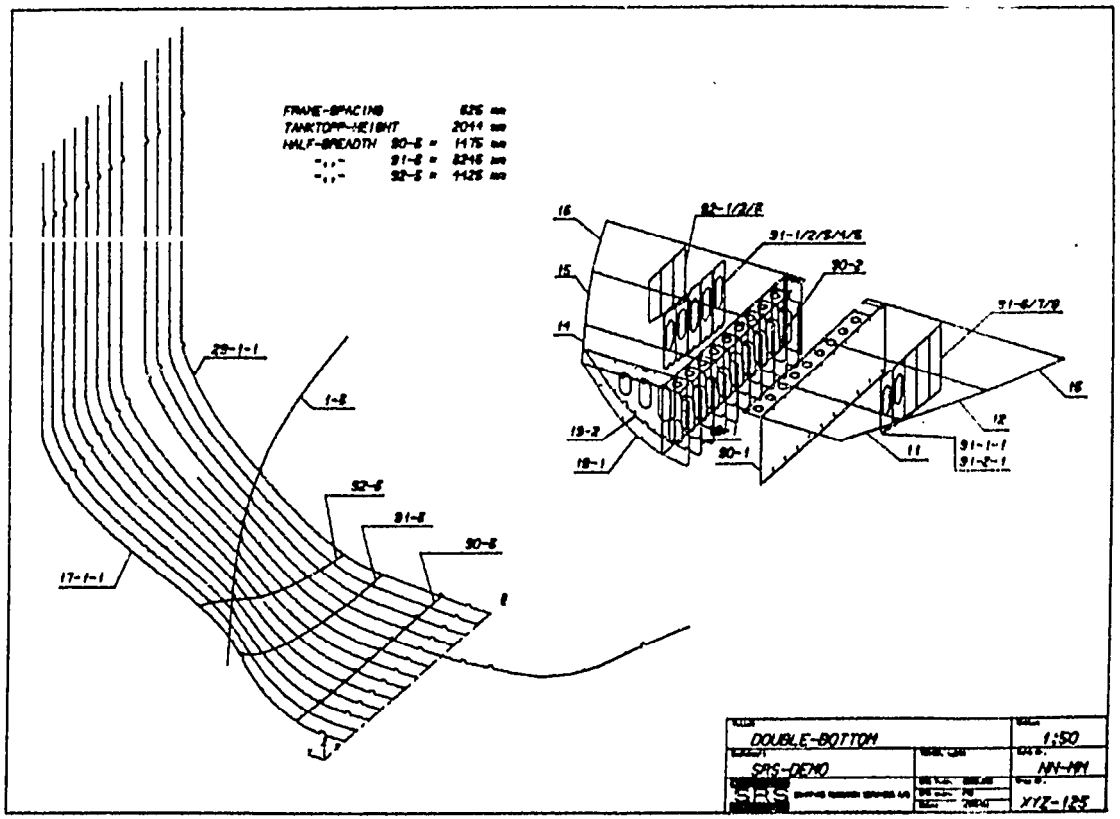

Figure 7

$BEGIN-PICT 13,V,A2,Y
$SHOW-AXIS-GLOBAL
$SET-SCALE 0.05
$
THIS PICTURE IS TO BE USED FOR 7 STRUCTURAL PARTS IN AN ASSEMBLY.
THE SCALE FACTOR IS CHOSEN TO TRANSFORM BETWEEN 'REAL' VALUES AND THE SIZE OF THE DRAWING PAPER. (NOT THE ACTUAL SIZE OF THE TEKTRONIX SCREEN!)
'SAME-PART'
1/4
400
300
200
100
100
200
300
400
500

Figure 8

$FETCH-PART 90-2
$POSITION X
$ROTATE-X -90
$ROTATE-Y 45
$ROTATE-X 30
$
'SAME-PART'
2/4
THIS SERIES OF ROTATIONS
HAS POSITIONED ONE OF
THE PARTS THAT WE HOPE
WILL GIVE A GOOD 3-D
PICTURE OF THE ASSEMBLY

Figure 9

8
THIS IS THE SAME AS THE PREVIOUS PICTURE.
ALL INTERMIDIATE POSITIONS DURING ROTATIONS ARE REMOVED.
WE NOW WANT THE OTHER PARTS TO GO THROUGH THE SAME ROTATIONS.
'SAME-PART'
3/4

Figure 10

$SAME-PART 14
$SAME-PART 15
$SAME-PART 16
$SAME-PART 18-1
$SAME-PART 19-1
$SAME-PART 19-2
$
'SAME-PART'
4/4
THE 'SAME-' COMMAND
IS EQUIVALENTE TO A
COMBINATION LIKE:
1) FETCH-
2) POSITION
3) ROTATE
4) ROTATE
ETC ...
ALL OPERATIONS ON THE
CURRENT OBJECT ARE
REPEATED.

Figure 11

Macro

A complex example:

We want a macro to draw the title-field
on a drawing.

Title: DEMONSTRATION OF MACRO		Scale: 1/1000
Customer: SOMEBODY	Vessel type: YACHT	Yard nr. 123
[redacted] SRS SHIPPING RESEARCH SERVICES A/S	SRS P.nr. 12515 SRS sign. FVC Date: JUNE/81	Drow nr. 123-0

The frame in AUTOPART

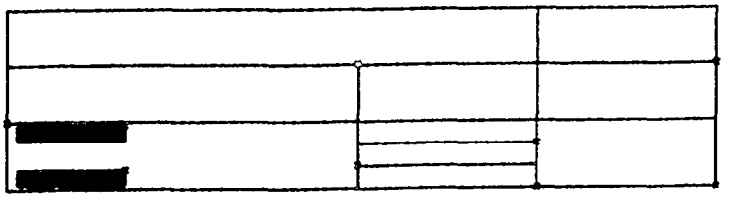

Figure 12

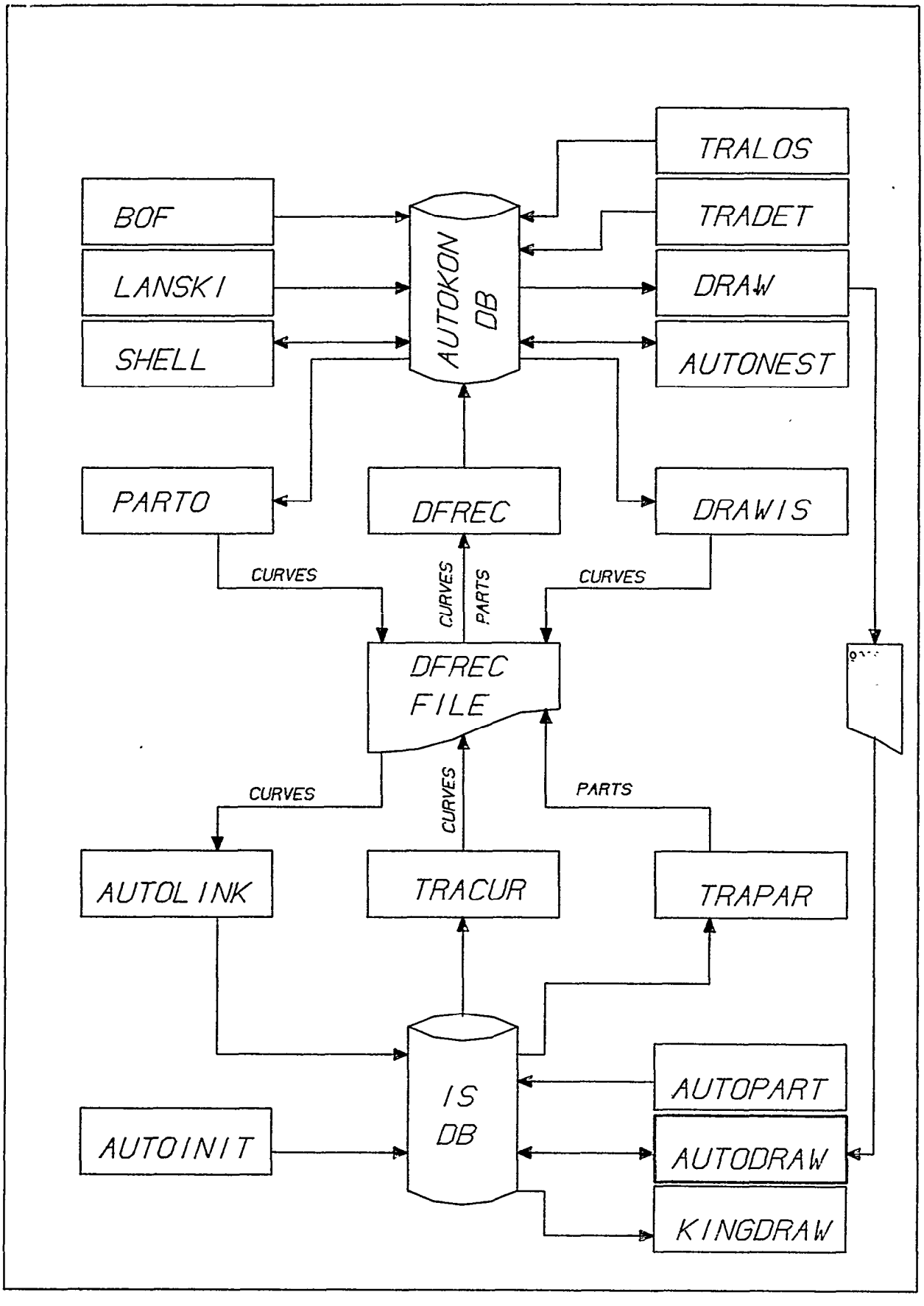
TRALOS
BOF
TRADET
AUTOKON DB
LANSKI
DRAW
SHELL
AUTONEST
PARTO
DFREC
DRAWIS
CURVES
CURVES
PARTS
CURVES
DFREC FILE
CURVES
CURVES
PARTS
AUTOLINK
TRACUR
TRAPAR
IS DB
AUTOPART
AUTOINIT
AUTODRAW
KINGDRAW

Figure 13

Additional copies of this report can be obtained from the
National Shipbuilding Research and Documentation Center:

http://www.nsnet.com/docctr/

Documentation Center
The University of Michigan
Transportation Research Institute
Marine Systems Division
2901 Baxter Road
Ann Arbor, MI 48109-2150

Phone: 734-763-2465
Fax: 734-763-4862
E-mail: Doc.Center@umich.edu